Webinar on MADOCA

Webinar 1:

Introduction to MADOCA Systems
Dr. Dinesh Manandhar, The University of Tokyo
Dr. Yize Zhang, Tokyo University of Marine Science and Technology
Date: 3rd June, Wednesday
Time: 15:00 – 16:00
Please note all times are in local time (Philippines)

Webinar 3:

Low-Cost MADOCA Receiver Systems
Dr. Dinesh Manandhar, The University of Tokyo
Date: 4th June, Thursday
Time: 15:00 – 16:00

ZOOM Links

https://us02web.zoom.us/meeting/register/tZYuceGtqD4iGtHbLHxsF26hAVuSn9cLrIpq
ZOOM Meeting ID: 823 6856 5805 / Password: 035138

Webinar Reference:
https://home.csis.u-tokyo.ac.jp/~dinesh/WEBINAR.htm
dinesh@csis.u-Tokyo.ac.jp

Webinar 2:

MADOCA Data Analysis
Dr. Nobuaki Kubo, Tokyo University of Marine Science and Technology
Date: 3rd June, Wednesday
Time: 16:00 – 17:00

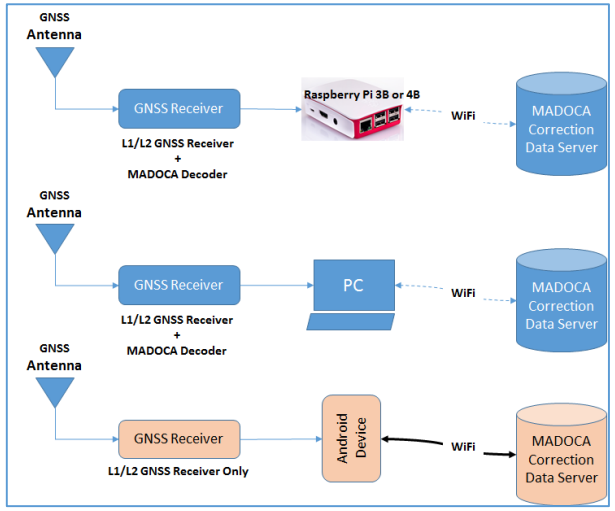

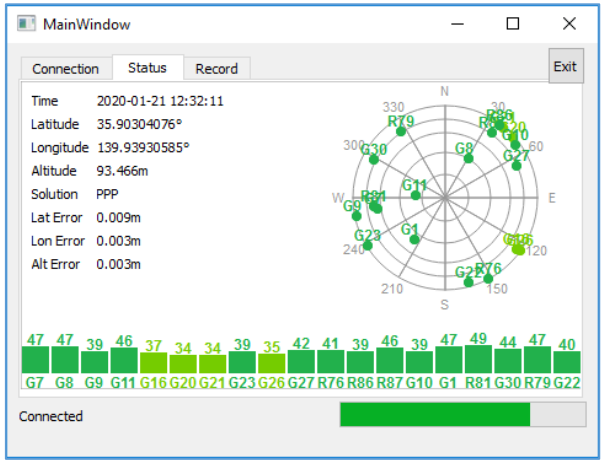

Local Contacts:

Dr. Rosalie Reyes / Dr. Ariel Blanco, University of Philippines